Historic, archived document

Do not assume content reflects current scientific knowledge, policies, or practices.

aS56.9
R31
41-7

2066

The use of

CYLINDER INFILTROMETERS
to
DETERMINE the INTAKE CHARACTERISTICS of IRRIGATED SOILS

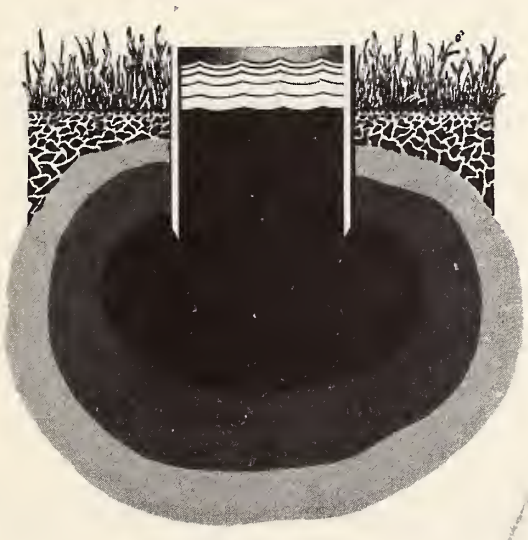

Agricultural Research Service and Soil Conservation Service
UNITED STATES DEPARTMENT of AGRICULTURE
May 1956 Washington 25, D. C. ARS 41 - 7

TABLE OF CONTENTS

	Page
Foreword and Introduction	
Site Selection	1
Equipment	1
Installation	5
Operation	6
Computing and Plotting Data	7
Plate 1	
Intake Cylinder and Driving Plate	9
Plate 2	
Driving Hammers for Intake Cylinders	9
Plate 3	
Hook Gage for Use with Intake Cylinders	10

By *Howard R. Haise and William W. Donnan*
AGRICULTURAL RESEARCH SERVICE

and

John T. Phelan, Lester F. Lawhon and Dell G. Shockley
SOIL CONSERVATION SERVICE

Foreword

Representatives of the Western Soil and Water Management Section of the Agricultural Research Service met with representatives of the Soil Conservation Service in Denver, Colorado on January 27 and 28, 1955 to discuss items of mutual interest in the fields of irrigation and drainage. One topic brought up for discussion concerned the use of cylinder infiltrometers for measurement of intake rates. Data from such measurements have been widely used in the Western States as a basis for the design of farm irrigation systems and the development of recommendations for water application practices. However, the discussion indicated a wide variation in the equipment used and in the procedures and techniques followed in making these measurements. The group felt that a standardization of equipment and procedure would tend to increase the reliability of the data and would permit comparisons of intake measurements obtained over a wide area. As a result of this expressed need, an intake Committee was appointed and was charged with the responsibility of reviewing present methods and techniques. The committee also was asked to recommend a standard procedure which could be adopted for use by technicians of both agencies represented and by others who might be interested in making such measurements. Appointed to this committee were: Howard R. Haise, Staff Specialist, Agricultural Research Service, Fort Collins, Colorado, Chairman; William W. Donnan, Area Supervisor, Agricultural Research Service, Riverside, California; John T. Phelan, Irrigation Engineer, Soil Conservation Service, Lincoln, Nebraska; Lester F. Lawhon, Irrigation Engineer, Soil Conservation Service, Fort Worth, Texas; and Dell G. Shockley, Irrigation Engineer, Soil Conservation Service, Portland, Oregon.

The committee reviewed the methods and techniques being used throughout the Western States and prepared a tentative draft of a standardized procedure which was distributed to field personnel of both agencies for comments. Following this, the committee met in Fort Collins, Colorado to consider the comments and recommended revisions submitted and to prepare a final report. The standardized procedure which appears in this report is respectfully submitted by the Intake Committee as a recommended procedure for field use.

INTRODUCTION

1/ Cylinder infiltrometers have been found suitable for use in determining the intake characteristics of irrigated soils. While much is still to be learned about the relationship of these characteristics to needed water management practices with the various methods of irrigation, it is felt that if uniform procedures are followed in making intake studies, these relationships may be determined. At the present time, intake characteristics, as measured with cylinder infiltrometers, are extensively used for the development of irrigation layouts and irrigation water management criteria for the border and other controlled flooding methods of irrigation. The suitability of such data for these uses is generally accepted but needs refinement. Correlations of infiltrometer data with furrow and sprinkler intake rates have not been developed. These relationships should be investigated.

One means of studying the relationship between cylinder infiltrometer data and field irrigation practice requirements is through careful intake studies made in connection with field irrigation practice evaluation trials. Procedures for evaluation trials with border, furrow and sprinkler methods of irrigation have been developed and are used uniformly by technicians throughout the irrigated areas of the country. For greatest usefulness in analysis, uniform procedures for the use of cylinder infiltrometers, also, should be followed.

The following procedural suggestions were developed from field observations by the authors and from the studies and suggestions of other technicians who have been working in this field.

1/ The term cylinder infiltrometer was adopted instead of the widely used term "ring infiltrometer" because it more accurately describes the device.

SITE SELECTION

1. Select a site that is considered representative of a particular soil mapping unit. Infiltrometer measurements should not be attempted on sites that have shrinkage cracks extending to a depth greater than about four inches.

2. Examine and describe the soil profile. Determine texture and textural changes. Describe the soil structure. Conditions in the top foot are of particular importance. Check for the presence of excess amounts of adsorbed sodium on sites where alkali conditions are suspected.

3. Make estimates of soil moisture, or secure samples for soil moisture determinations. It is recommended that, where feasible, studies be made when moisture conditions indicate that normal irrigation applications are needed.

4. Examine and describe the surface cover conditions. Record the kind of crop and the stage of growth. Describe any surface litter or mulch covering found at the site. Describe the surface soil conditions - freshly cultivated, cloddy, crusted, cracked, etc. Determine and record the cropping history for at least the two previous years.

5. Make notes of any other conditions observed that might have an influence on intake rates.

EQUIPMENT

METAL CYLINDERS Cylinders having an inside diameter of not less than nine inches are required. The cylinders should be constructed of smooth steel to minimize skin friction. Cold rolled steel is better than ordinary mild steel. Galvanized steel is acceptable. Wall thickness should not exceed 0.08 inch (approximately 14 gage) unless a sharpened cutting edge is provided. Longitudinal seams should be butt welded and ground to a reasonably smooth finish. The cylinders should have a minimum length of ten inches. Cylinders 12 to 14 inches long usually are most desirable. It is recommended that a group of five cylinders be used for each test. In no case should less than three cylinders be used. For ease in transportation, cylinders can be made with different diameters so that they will nest one within another. A set of five cylinders having inside diameters of 10, 10-1/2, 11, 11-1/2 and 12 inches can be stored or transported in the space ordinarily occupied by one 12-inch cylinder. Plate 1 shows recommended construction details.

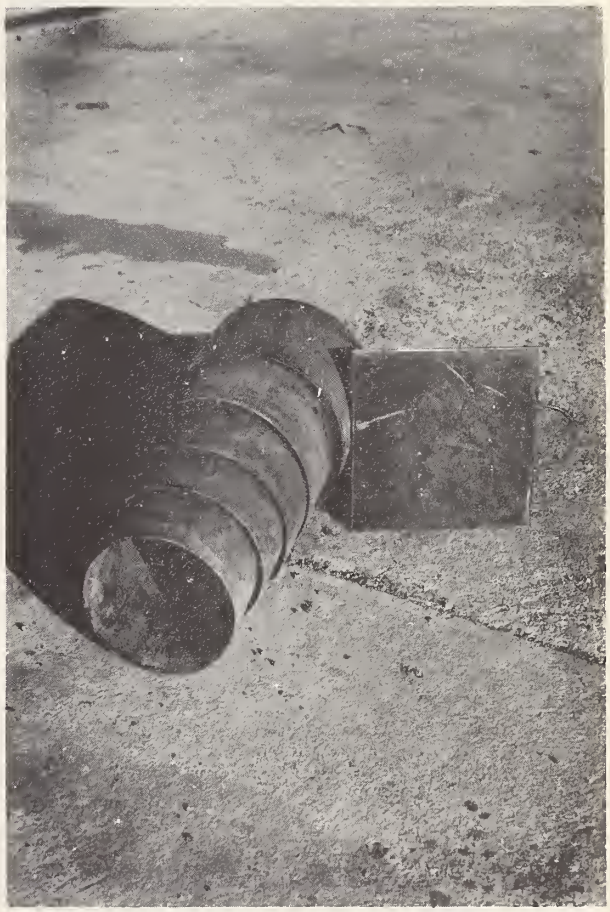

DRIVING PLATE A piece of steel plate at least 1/2 inch thick and from two to four inches larger than the diameter of the largest cylinder will make a satisfactory driving plate. If

desired, lugs may be welded onto the lower face to keep the plate approximately centered on the cylinders. Also, if desired, a handle, made of 1/2 inch diameter steel rod, may be welded to one edge of the plate for greater ease in carrying. See Plate 1 for construction details.

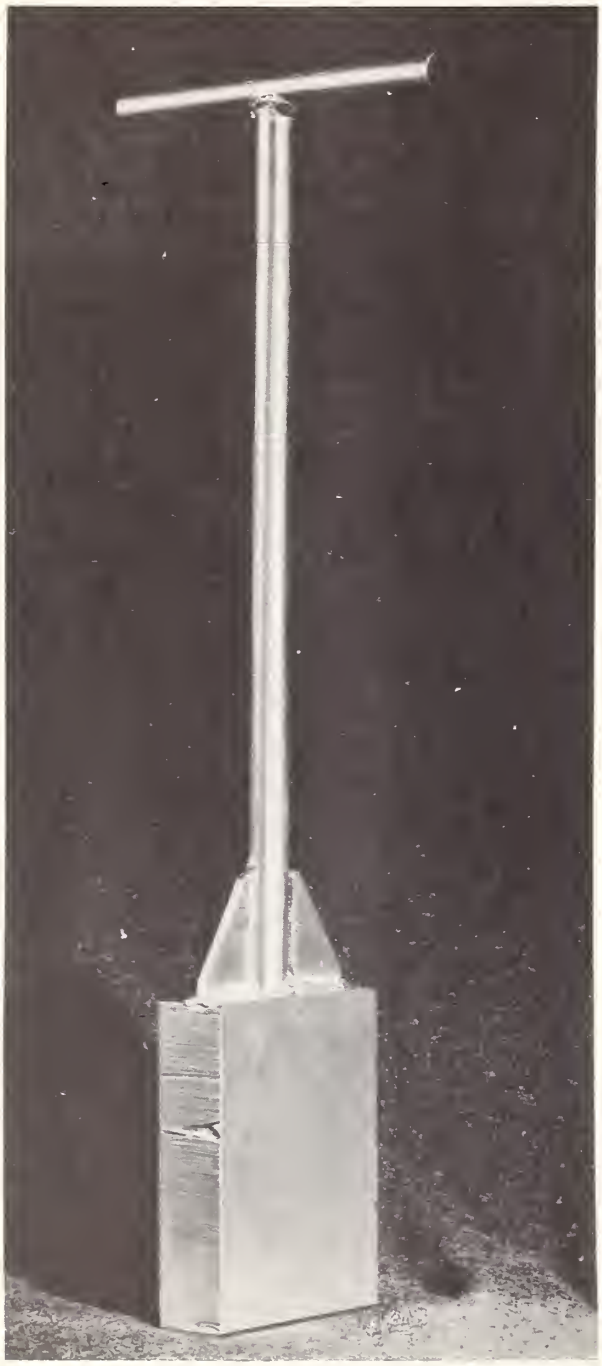

DRIVING HAMMER Heavy hammers are best. A 16-pound sledge hammer, used as a tamp rather than with a swinging blow, is adequate for many soils. A better hammer can be constructed by attaching a handle to one edge of a 2-inch thick steel block. If the steel block is made 6 inches wide and 8 inches long, the hammer will weigh about 30 pounds. See Plate 2 for construction details. Another satisfactory hammer can be made by attaching a 1-1/4 x 3-inch banded malleable iron reducer to a 4-foot length of standard 1-1/4 inch galvanized pipe and filling the reducer and pipe with about 15 or 20 pounds of lead. The construction of this type of hammer, also, is shown in Plate 2. Any similar heavy driving device will be suitable.

BUCKETS A water bucket (10 to 12 quart capacity) usually will be needed to convey water to the cylinder. Sometimes it will be desirable to have more than one bucket.

WATER SUPPLY. Water of the same quality used for irrigation should be used in the intake studies. Water for these studies often can be obtained from a nearby irrigation ditch. Where this is not possible, a container or containers of sufficient capacity to provide the water needed for the intake cylinders and their buffer ponds will be required. Fifty-gallon steel drums are satisfactory containers for use in hauling water to study sites. Ten-gallon milk cans, also, are very satisfactory.

HOOK GAGE A hook gage that can be read to 0.05 inch is required. An adequate hook gage can be made using an ordinary triangular engineer's scale and a piece of welding rod about 16 inches long and of a size that will fit in the groove on the face of the scale. The welding rod is ground to a fine point on one end and then bent to form a hook. A flat piece of brass soldered to the rod about 3 inches from the other end will prevent the gage from turn-

ing in the groove and will serve as the measuring index point. Plate 3 shows how this hook gage is made.

PUDDLING PROTECTION DEVICE A piece of folded burlap, cloth or heavy paper should be provided to cover the soil surface inside the cylinders to prevent puddling when water is first applied. A thin board, cut for a loose fit in the cylinders, also will provide satisfactory protection.

TIMING DEVICE Any type of watch that can be read accurately to the nearest minute will be satisfactory.

RECORDING FORMS A standard form should be used for recording the test location, site conditions, date and observations of the time and water level in the cylinders. A form for recording the data from a test group of 5 cylinders is shown in Figure 1. Figure 2 is

Fig. 1: Cylinder Infiltrometer Test Data

FARM *John Doe* COUNTY *Goshen* STATE *Wyo.* LEGAL DESC. *Sec. 32, T23N, R60W* DATE *8-15-55*

SOIL MAPPING SYMBOL *1M44D* SOIL TYPE *Keith Silt Loam* SOIL MOISTURE: 0' - 1' *20* % OF AVAILABLE

CROP *Alfalfa* STAGE OF GROWTH *Immediately after Cutting* 1' - 2' *40* % OF AVAILABLE

GENERAL COMMENTS *Irrigated Land = Rotation: Corn, Sugar Beets, Sm. Grain, Alfalfa*
Seeded to Alfalfa in 1954

Elapsed Time	Cylinder #1			Cylinder #2			Cylinder #3			Cylinder #4			Cylinder #5			Average Accum. Intake
	Time of Reading	Hook Gauge Reading	Accum. Intake	Time of Reading	Hook Gauge Reading	Accum. Intake	Time of Reading	Hook Gauge Reading	Accum. Intake	Time of Reading	Hook Gauge Reading	Accum. Intake	Time of Reading	Hook Gauge Reading	Accum. Intake	
Min.		In.	In.		In.	In.		In.	In.		In.	In.		In.	In.	In.
0	8:00	9.15	0	8:01	9.26	0	8:02	9.03	0	8:03	9.20	0	8:04	8.95	0	0
5	8:05	8.75	0.40	8:06	8.80	0.46	8:07	8.78	0.25	8:08	8.88	0.32	8:09	8.76	0.19	0.36
10	8:10	8.47	0.68	8:11	8.60	0.66	8:12	8.51	0.52	8:13	8.66	0.54	8:14	8.27	0.68	0.62
20	8:20	8.10	1.05	8:21	8.26	1.00	8:22	8.20	0.83	8:23	8.34	0.86	8:24	7.96	0.99	0.95
30	8:30	7.86 9.10	1.29	8:31	8.03 9.25	1.23	8:32	7.92 9.05	1.11	8:33	8.17 9.15	1.03	8:34	7.78 8.98	1.17	1.17
46 ~~45~~	8:46	8.79	1.60	8:47	8.98	1.50	8:48	8.61	1.55	8:49	8.87	1.31	8:50	8.61	1.54	1.50
60	9:00	8.51	1.88	9:01	8.62	1.86	9:02	8.43	1.73	9:03	8.75	1.43	9:04	8.60	1.55	1.69
90	9:30	7.99	2.40	9:31	8.23	2.25	9:32	7.96	2.20	9:33	8.22	1.96	9:34	8.04	2.11	2.18
120	10:00	7.49 9.14	2.90	10:01	7.83 9.21	2.65	10:02	7.40 9.05	2.76	10:03	7.83 9.17	2.35	10:04	7.56 9.01	2.59	2.65
180	11:00	8.36	3.68	11:01	8.56	3.30	11:02	8.19	3.62	11:03	8.49	3.03	11:04	8.46	3.14	3.35
240	12:00	7.64	4.40	12:01	7.98	3.88	12:02	7.45	4.36	12:03	7.91	3.61	12:04	7.80	3.80	4.01

Fig. 2: Soil Description

Soil type *Keith Silt Loam 1M44D*		Date *8-15-55*	Stop No.
Classification *Medial Chestnut*		Area *Goshen Co., Wyoming*	
Location *S 32-T23N-R60W*			
N. veg. (or crop) *Alfalfa*		Climate *Temperate-Semi Arid*	
Parent material *Peorian Loess*			
Physiography *Dissected Loess Plain, Interstream Divide*			
Relief *Moderate*	Drainage *Well Drained*	Salt or alkali *None*	
Elevation *4170*	Gr. water *Deep*	Stoniness *None*	
Slope *1% SW Sl. Convex*	Moisture *Mod. Dry*		
Aspect	Root distrib. *Unrestricted*		
Erosion *Slight*			
Permeability *Moderate*			
Additional notes			

Soil type

File No.

Form-SCS-232A-Soil Description 6-28-55

GPO: 1955 O—352261

Horizon	Depth	Thickness	Boundary	Color (Check. D (ry) or M (oist))	Texture	Structure	Consistence	Reaction	Spec. Feat.
A1p	*0-6*			D M	*Sil.*	*1 fgr*	*D-s*		
A12	*6-10*			D M	*Sil.*	*2 fgr*	*D-sh*		
B1	*10-13*			D M	*Sil.*	*2 csbk 2 fsbk*	*D-sh*		
B2	*13-20*			D M	*Sil.*	*1 cpr 2 m&f-sbk*	*D-sh*		
Bca	*20-30*			D M	*Sil.*	*2 m&f sbk*	*M-fr*		
Cca	*30-42*			D M	*Sil.*	*1 csbk*	*M-Vfr*		
C	*42-60*			D M	*Sil.*	*0*	*M-Vfr*		
				D M					
				D M					
				D M *Lime in C horizon disseminated*					
				D M *Numerous Krotovinas were noted*					
				D M					

the standard soil description form used in the Soil Conservation Service. This, or some similar form, should be used to record the characteristics of each test site.

MISCELLANEOUS EQUIPMENT The following miscellaneous equipment usually should be made available:

Shovel	Small Scrubbing Brush
Clip-board	Auger or Soil Tube

INSTALLATION

1. Select a proposed exact location for each cylinder and examine carefully for signs of unusual surface disturbance, animal burrows, stones that might damage cylinder, etc. Avoid areas that may have been affected by unusual animal or machinery traffic. The individual cylinders used for a single test should be set close enough together so that they can conveniently be run simultaneously. Normally they should be set within a one-half acre area.

2. Set cylinder in place and press firmly into soil.

3. Place driving plate on cylinder. Tap plate with driving hammer to get cylinder started into the soil. Check to see that cylinder is plumb (top is level). Carpenter's level can be used to check, but usually adequate leveling can be done by eye .

4. Stand on driving plate and tamp with driving hammer until the cylinder is driven to desired depth. Level of cylinder should be checked frequently. Keep it approximately plumb at all times. Do not drive the cylinder into the soil irregularly so that first one side then the other goes down. This produces a poor bond between the cylin-

der wall and the soil, and may disturb the soil core within the cylinder. If the cylinder gets materially out of plumb while driving, remove it and reset in a comparable nearby location. Cylinders should be driven to a depth of approximately six inches.

5. Construct buffer pond. A satisfactory buffer pond can be constructed by throwing up a low (3 to 6 inches) dike around the cylinder. The inside toe of the dike should be at least 6 inches from the cylinder. In building this dike, do not disturb the soil within the buffer pond area. In cropped fields or in areas where water supplies must be hauled to the test site, it may be desirable to use a metal cylinder to form the buffer pond. These buffer cylinders should be at least 12 inches larger in diameter than the intake cylinders. Outside cylinders, however, need not be as long as the intake cylinder nor driven as deep. Generally buffer cylinders 8 inches long and driven 2 to 4 inches into the soil will be adequate. Since these large diameter cylinders usually are driven by tamping blows around their circumference, they should be constructed of 10 gage or heavier metal, or they should have a reinforcing strip welded around the top.

Note: Buffer ponds are not required for all sites. Where the principal layer of restricted hydraulic conductivity, such as a plow pan, is penetrated by the intake cylinder a buffer pond will not be required.

OPERATION

1. Fill buffer pond (if used) with water to a depth of at least two inches and maintain approximately the same depth throughout the period of observation. The depth of water in the buffer pond is not critical as long as a supply of water is always available for infiltration into the soil in the buffer area.

2. Place burlap or other puddling protection device on the soil within the intake cylinder.

3. Fill the intake cylinder with water to a depth of 4 to 5 inches.

4. Remove the puddling protection device.

5. Make hook gage measurement of the water surface elevation. Use cylinder edge for hook gage datum point and mark the cylinder so all subsequent measurements can be made at the same point on the cylinder. The cylinder should be filled quickly and the initial water surface observation made immediately, to reduce errors due to intake during this period.

6. Record the hook gage reading and the time at which the observation was made.

7. Make additional hook gage measurements at periodic intervals and record the data. Intervals between observations usually should be short (5 to 10 minutes) at the start of the test. After 2 or 3 measurements the intervals may be increased. After about the first hour measurements at 30 to 60 minute intervals usually will be sufficient. Observation frequencies should be adjusted to intake rates. For most soils, observations made at the end of 5, 10, 20, 30, 45, 60, 90 and 120 minutes and hourly thereafter, will provide good data. High intake rate soils may require more frequent measurements. As a general rule the intake between measurements should not be more than one inch. Measurements usually should be continued until 4 hours of time have elapsed. However, on high intake rate soils, it seldom is necessary to extend the tests beyond the time required to put about 6 inches of water into the soil. On very tight soils it may be desirable to continue the tests beyond 4 hours.

8. When the water level has dropped an inch or two in the cylinder, add suffi-

cient water to return the water surface to its approximate initial elevation. Maintain the depth of water in the cylinder between 3 and 5 inches throughout the entire test. When water is added be sure to record level before and after filling. Keep the interval between these two readings as short as possible to avoid errors due to intake during the refilling period. In using the data, the refilling is assumed to be instantaneous.

9. Where an abnormally high or low intake value is indicated by a cylinder, it should be dug out and the soil examined for possible causes. Record observations.

10. Remove cylinders and clean thoroughly. Mud encrusted cylinders are difficult to drive and are apt to cause excessive soil disturbance.

COMPUTING and PLOTTING DATA

1. Compute the average accumulated intake for each period of elapsed time. See the last column of the example shown on Figure 1.

2. Plot points of accumulated intake against elapsed time. Draw best-fit curve through the plotted points. Rectangular coordinate or log paper may be used. These curves often will be straight lines on log paper. Figure 3 shows the data from Figure 1 plotted on rectangular coordinate paper and Figure 4 shows these same data plotted on log paper.

3. Compute and plot the instantaneous intake rate curve from the accumulated

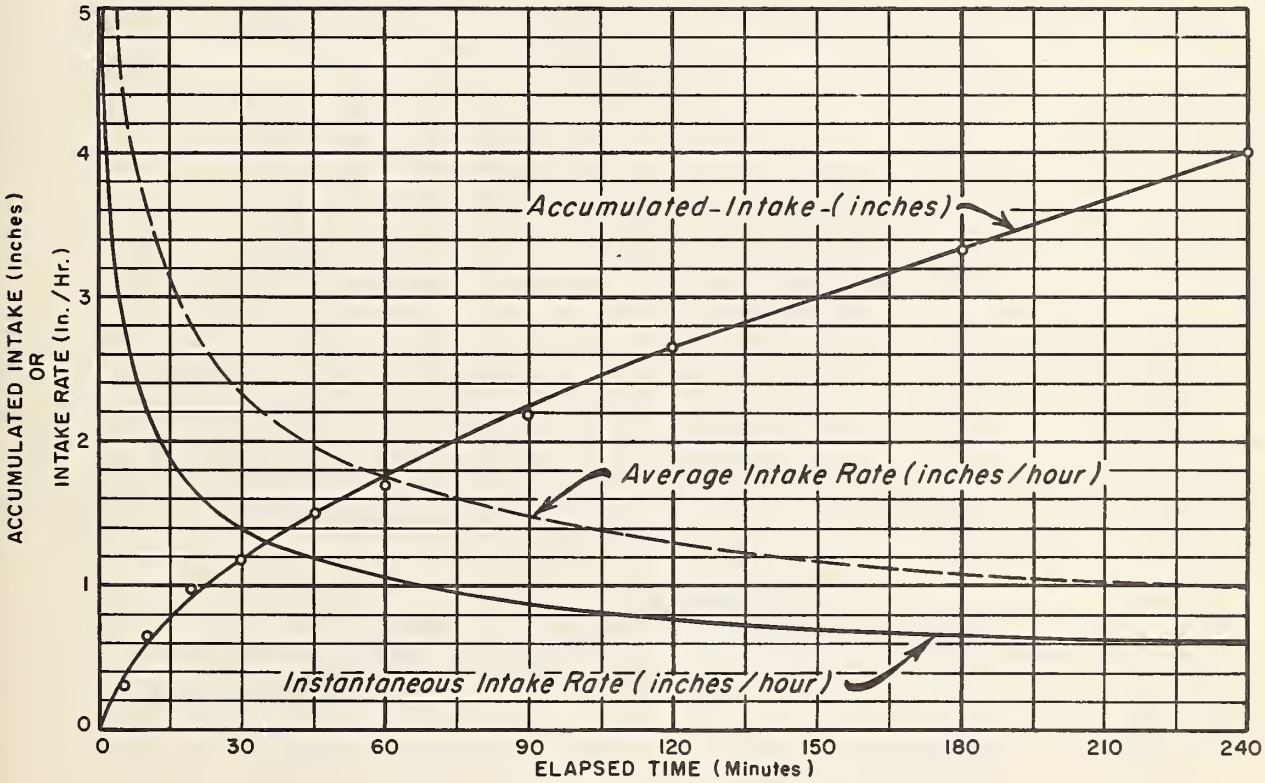

Fig. 3: Sample Intake Curves

intake curve, as drawn in 2 above. See Figures 3 and 4. This procedure will provide an intake rate curve that matches the accumulated intake curve. Computations of intake rates from the original field data usually results in unsatisfactory rate curves.

4. If desired, compute and plot average intake rate curve. The average intake rate is the accumulated intake (inches) to any time T divided by the time T (expressed in hours). Sample average intake rate curves are shown in Figures 3 and 4.

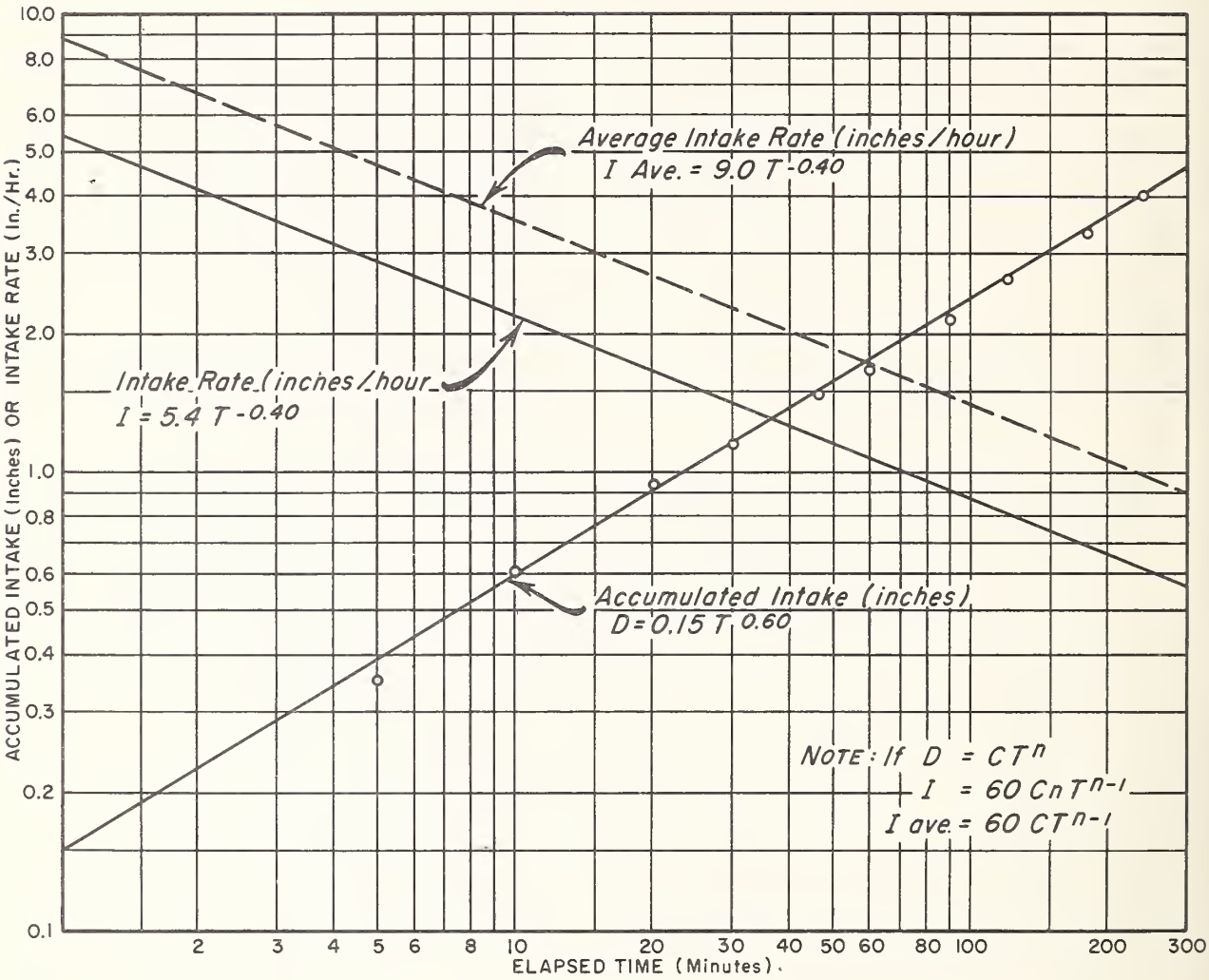

Fig. 4 : Sample Intake Curves

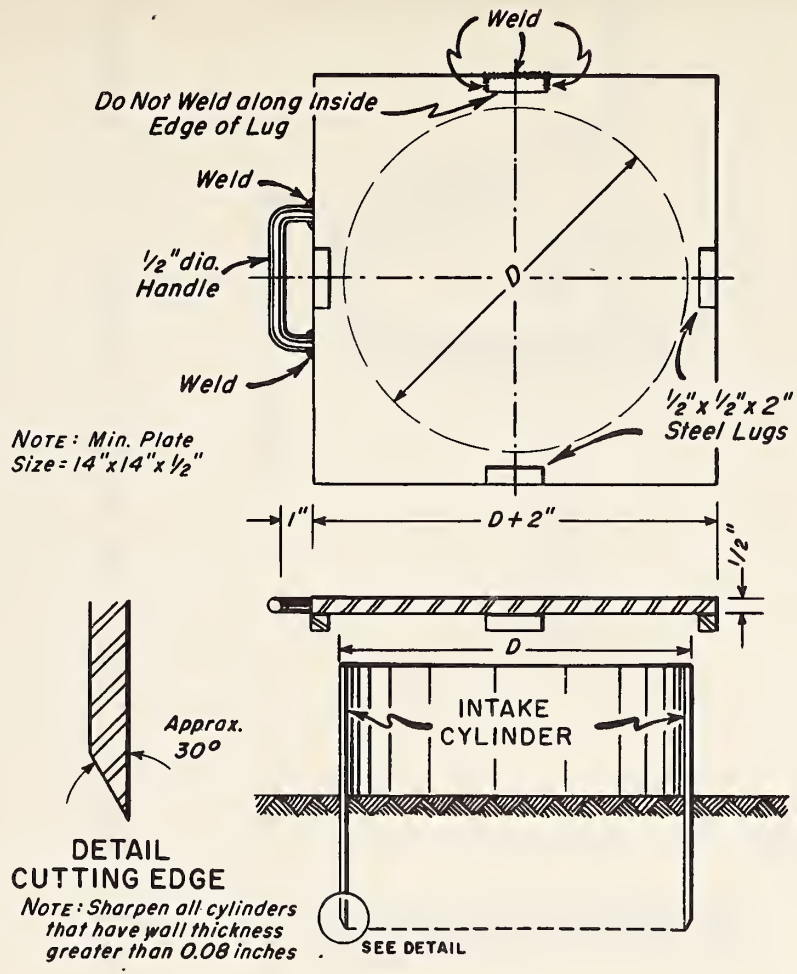

Plate 1: Intake Cylinder and Driving Plate

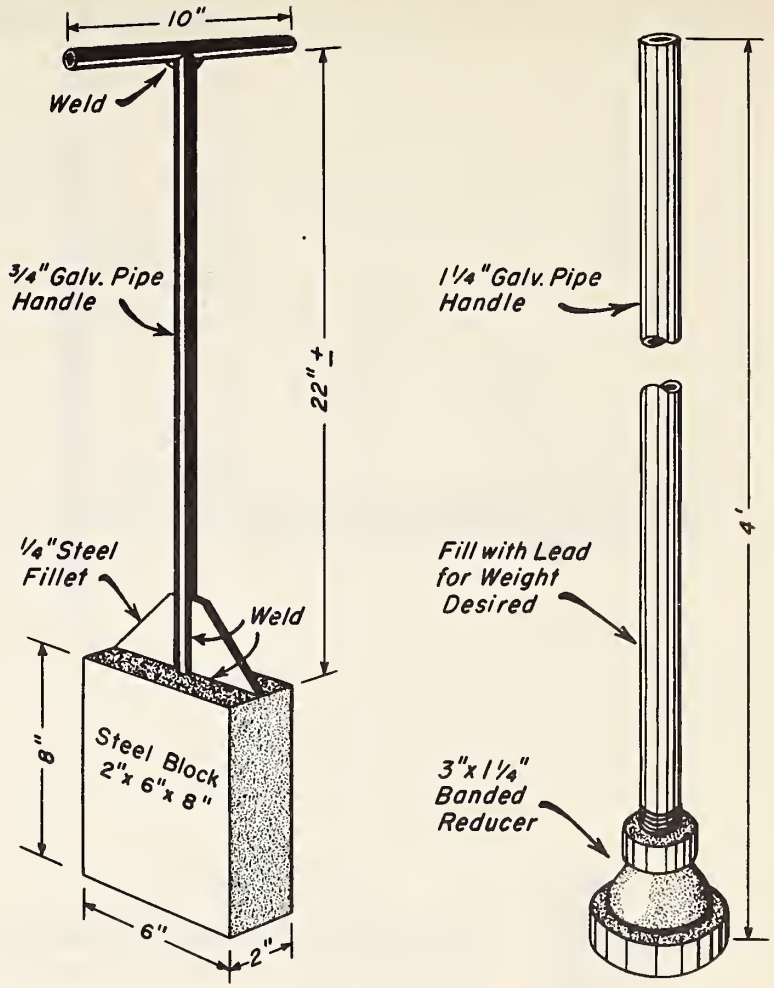

Plate 2: Driving Hammers for Intake Cylinders

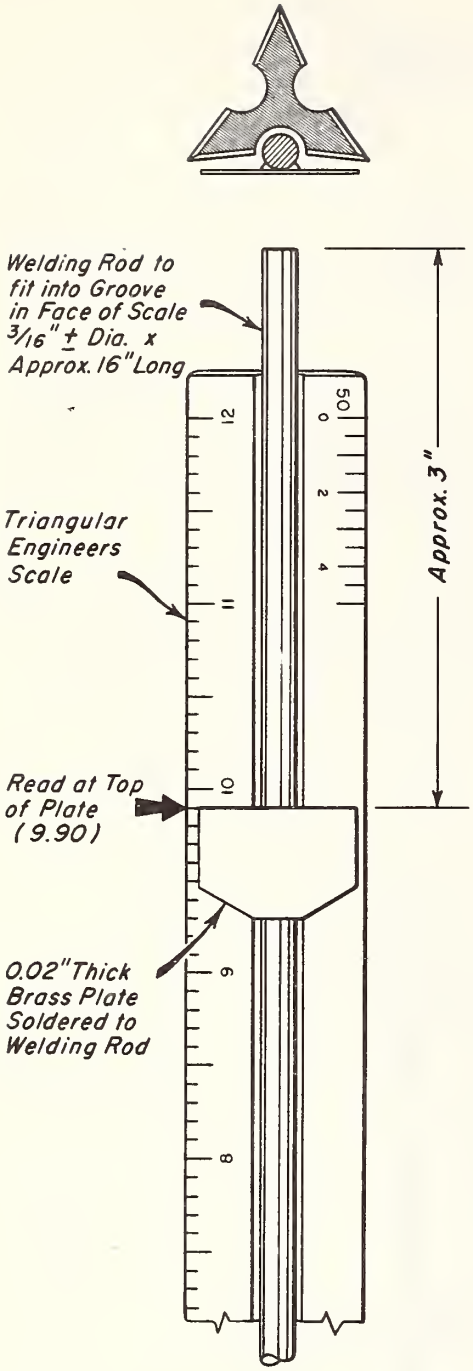

ASSEMBLED GAGE

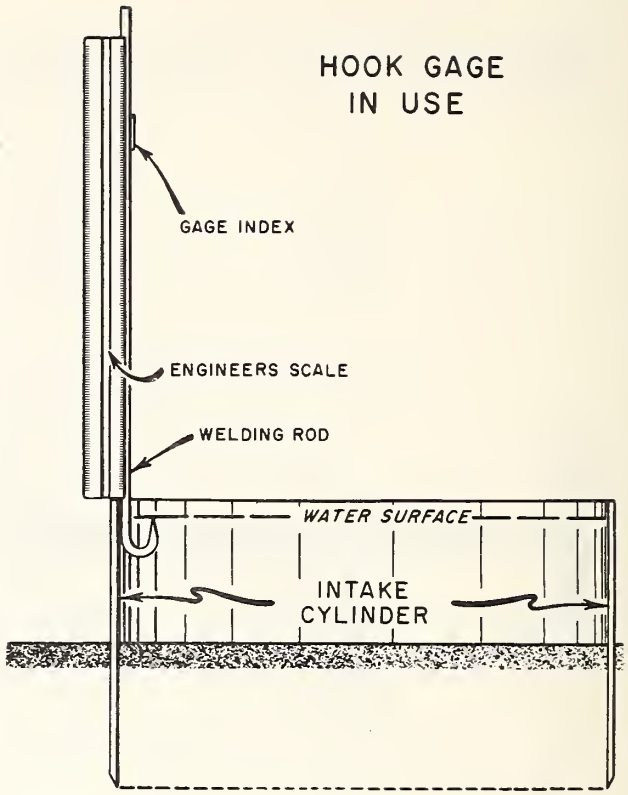

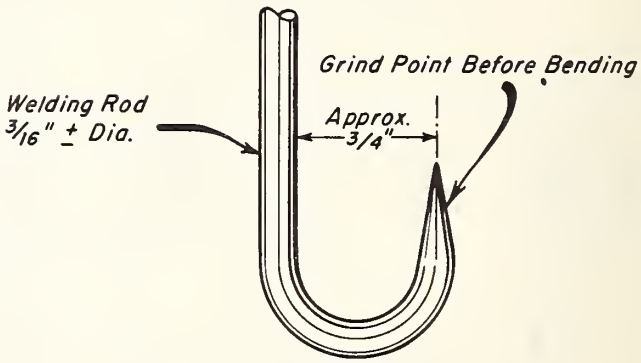

DETAIL OF HOOK

Plate 3: Hook Gage; for use with Intake Cylinders

☆U. S. GOVERNMENT PRINTING OFFICE : 1956 O - 385564